MODEL SPECIFICATION
CHEVROFLEX ULTRA™ - GATEWAY SIGN
30MPH ∅ 600MM SIGNFACE

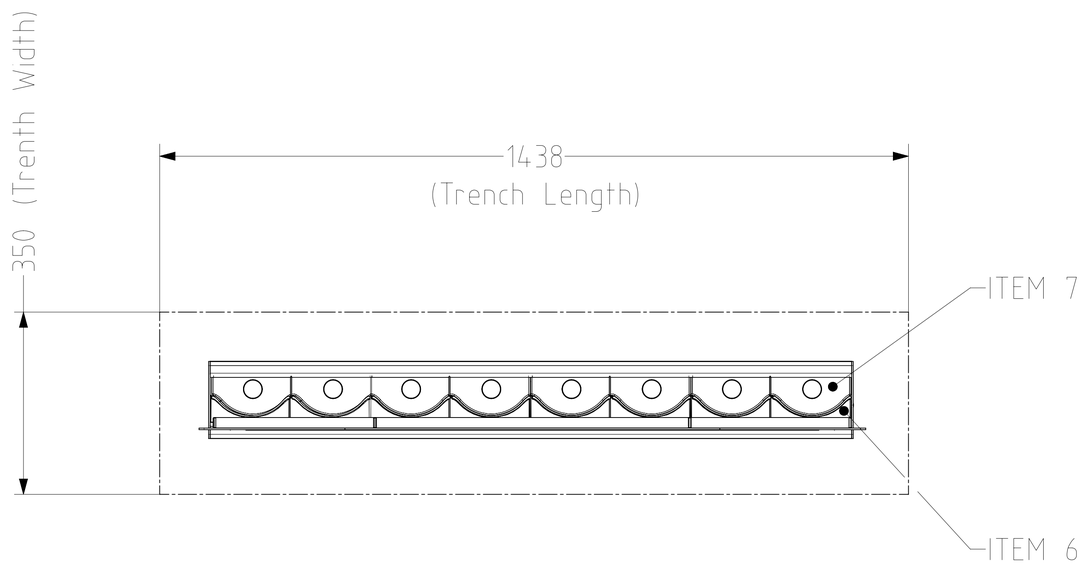

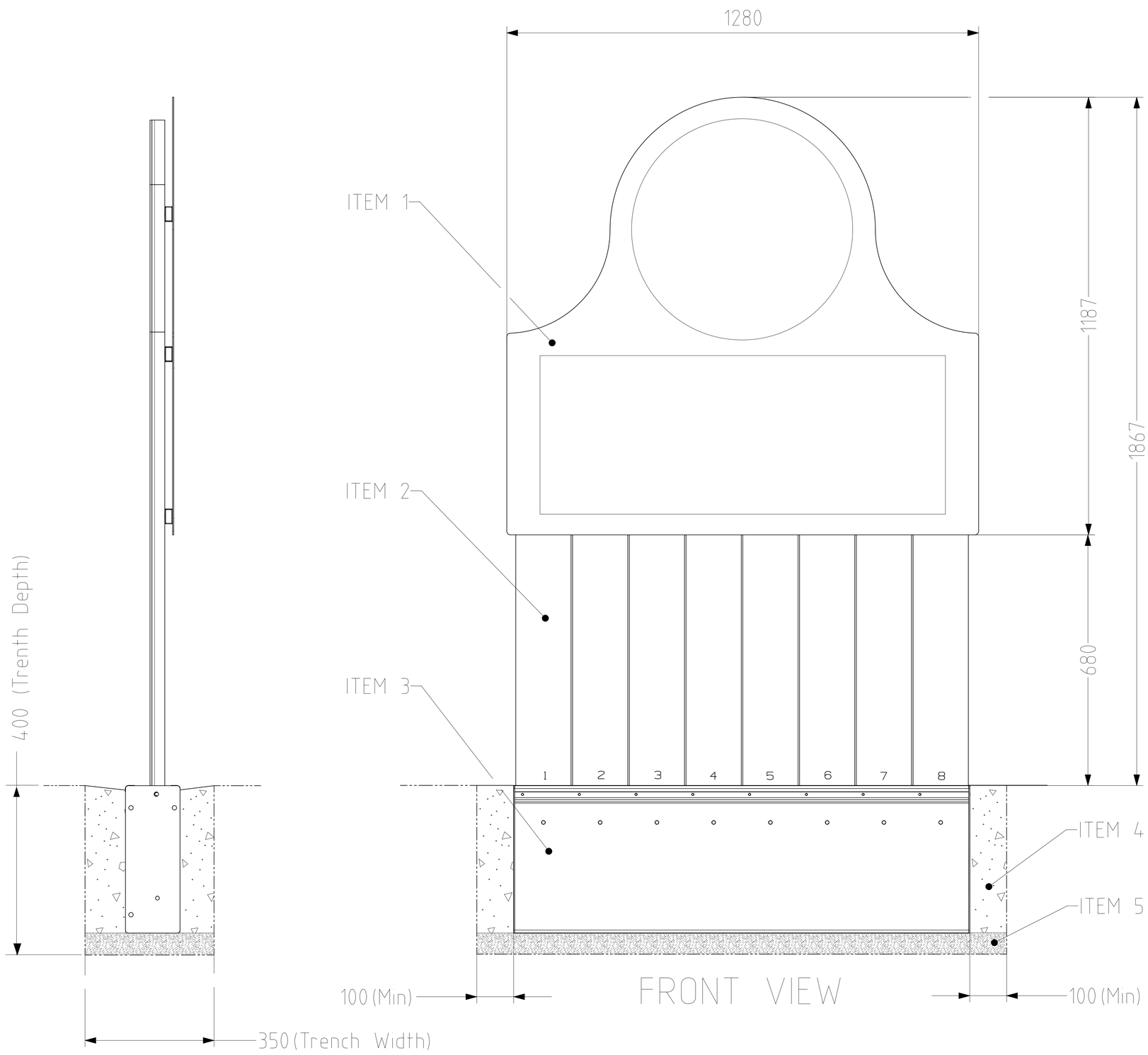

PRODUCT INFORMATION:

- MATERIAL - Impactaflex™ Chrevron Uprights
  - Galvanised Steel Socket Assembly
  - Aluminium & Polyethylene Composite Sign backing
- COLOURS - Black posts
- DIMENSIONS - All dimensions in mm unless otherwise stated.
- ITEM 1 - Retro-reflective Sign Assembly
- ITEM 2 - Chevron Upright
- ITEM 3 - 8 Upright Socket Fabrocation
- ITEM 4 - Quick Setting Concrete (e.g. Grade QC10)
- ITEM 5 - Sand
- ITEM 6 - Front Support / Seal
- ITEM 7 - Rear Retension Support / Seal

TECHNICAL REFERENCE :

- Conforms with the requirments of 'The Statuory Instruments No. 3113 - The Traffic Signs Regulations & General Directions 2002 (TSRGD)
- All retroreflective materials supplied by Glasdon are as recommended in that NA1 of the National Annex of BS EN 12899-1 2007 Fixed Vertical Road Signs.

  Microprismatic retroreflective materials used on our products meet the requirements of BS 8408 2005 Road Traffic Signs. Testing and Performance of Microprismatic Retroflective Sheeting Materials for their application and siting norms.

INSTALLATION GUIDE:

- Chevroflex Ultra to be orientated as shown in the front view to ensure it is positioned correctly.
- Ensure signs are positioned in correct orientation as diagrams.
- Please check site for buried services prior to installation.
- Suitable for soft and hard ground.
- Avoid contact with hot tarmacadam as this will seriously impair the performance of the Chevroflex Ultra socket and chevron uprights.
- We recommend installing with quick setting concrete (e.g. Grade QC10), but exact installation requirments should be assessed from as site survey.
- Dig trench using sockets as a guide adding 100mm min. at each end. Ensure socket top is flush with ground level and horizontal. Place in Trench and check with spirit level . Ensure ground sockets do not protrude above ground level. A protruding socket could suffer serious damage affecting the retention and alignment of the upright.
- When back filling with quick setting concrete, ensure that no concrete enters the socket.
- Refer to the full 'Chevroflex Ultra Installation Instructions' for comprehensive installation details.

REAR VIEW - LAYOUT OF CHEVRON UPRIGHTS

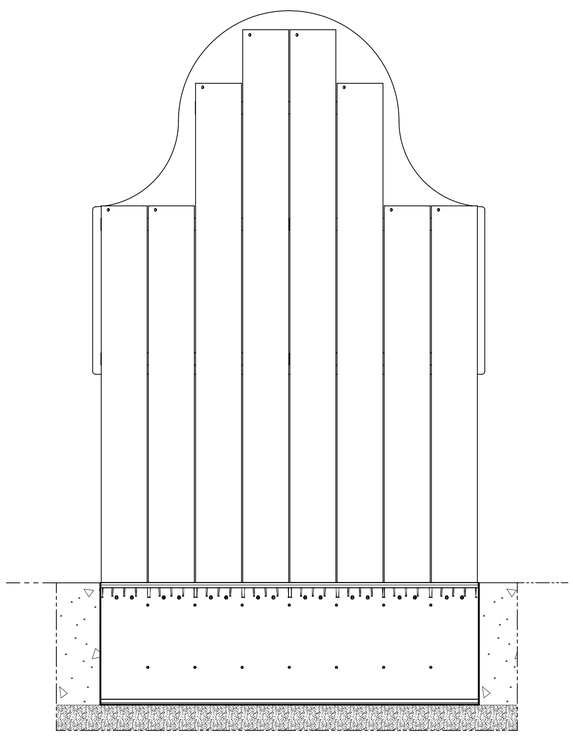

PRODUCT DATA:

Upright Number	Upright Length
1	1530mm
2	1530mm
3	1930mm
4	2105mm
5	2105mm
6	1930mm
7	1530mm
8	1530mm

OPTIONAL PARTS / SPARES:

- 6mm Allen Key to enable replacment of uprights.
- Individual replacement uprights available.
- Sign Assembly c/w Fixings
- Front support / seal & Rear Retention support / seal kits .

Glasdon®
Glasdon Group Ltd.

website: www.glasdon.com
e-mail: sales@glasdon.com
Telephone: 01253 600400
Facsimile: 01253 792558

Copyright and/or design right in this representation and the product it depicts is reserved by Glasdon Group Limited. The issue of this drawing, is a confidential disclosure of its contents, and is made on condition that it is neither disclosed to a third party, nor any item described here in and designed by Glasdon Group Limited, is produced either in whole or in part without the written consent of Glasdon Group Limited.

SPECIFICATION NUMBER - 02S069-S38	ISSUE 01
GLASDON GROUP LTD 27/02/13	SHEET SIZE:A2