Glasdon

5 YEAR WARRANTY

Modus™
Shelter

Modus Shelter is a versatile, cost-effective shelter designed for smoking areas, waiting areas and assembly points with two size options to suit a range of site requirements.

Technical Features

- Available in 2 sizes: 770 Model and 1280 Model.
- Compact footprint (1.6m x 1.3m and 1.6m x 1m).
- Vandal- and weather-resistant frame.
- Available in a variety of configurations.
- PETG glazing.
- Recycled Ecoboard™ panelling.
- Robust, double-skinned roof.

- Colours
Frame: Silver.
Roof: Anthracite Grey
Ecoboard Panelling: Dark Grey.
Spigot Legs: Anthracite Grey.
Glazing: Clear.
Blank Signage Panel: Light Grey.





MODUS 770

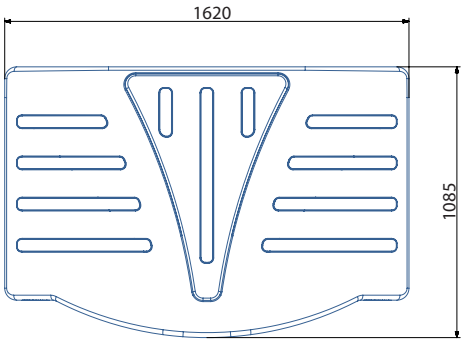

Overhead View

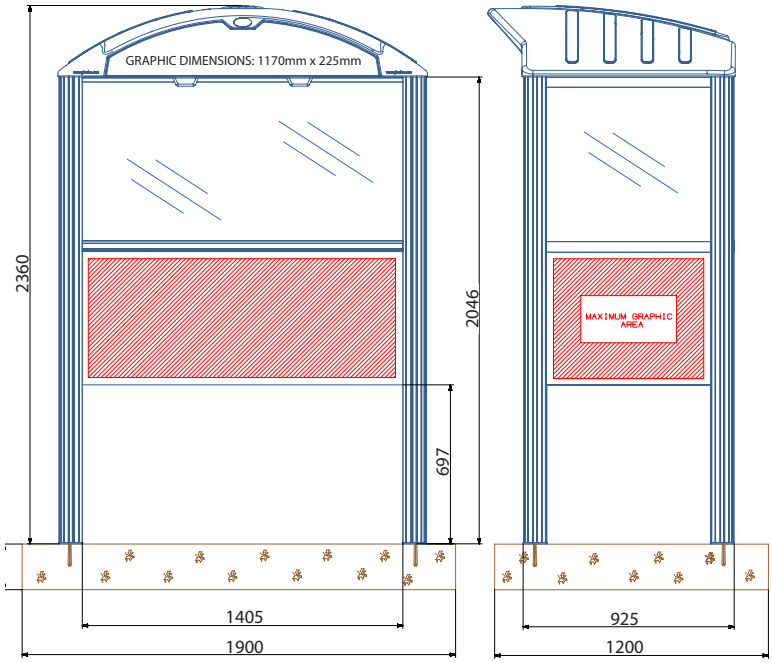

Front and Side View

MODUS 1280

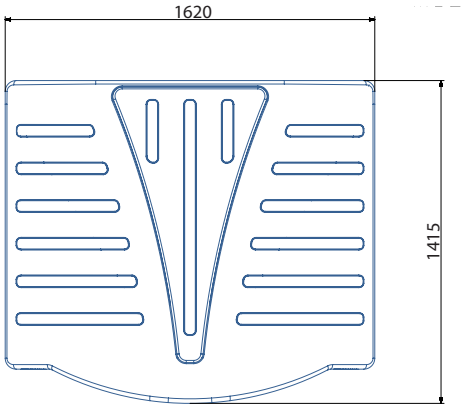

Overhead View

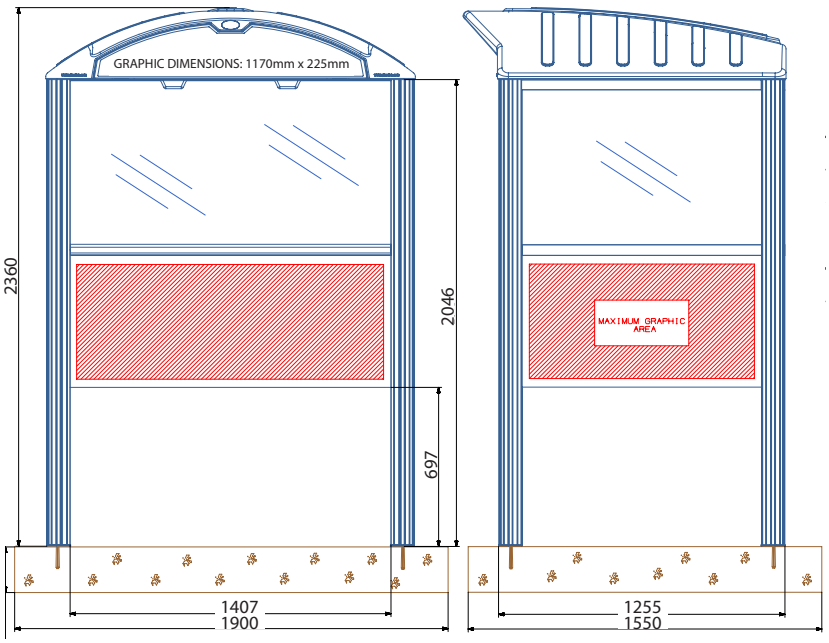

Front and Side View

(All measurements shown in millimetres)

Specifications

Height	2360mm
Overall Width	1620mm
Opening Width	1405mm (770 Model) 1407mm (1280 Model)
Overall Depth	1085mm (770 Model) 1415mm (1280 Model)
Base Footprint Depth	925mm (770 Model) 1255mm (1280 Model)
Framework Material	Anodised aluminium with Vandalex® coating
Roof Material	Durapol®
Panelling material	98% recycled Ecoboard™ Material
Spigot leg material	Mild steel with Armortec® coating
Glazing material	5mm PETG
Glazing strip material	Durapol
Blank signage panel material	Durapol

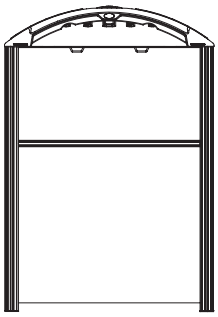

STANDARD MODUS SHELTER:

- 3 SIDES GLAZED
- ECOBOARD™ SIDE PANELS AT LOW LEVEL

STANDARD MODUS SHELTER WITH FULL BACK PANEL:

- 2 SIDES GLAZED
- 1 ECOBOARD TOP BACK PANEL
- ECOBOARD SIDE PANELS AT LOW LEVEL

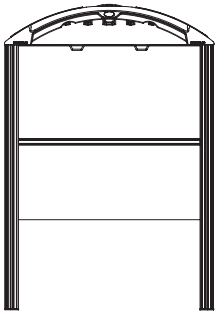

STANDARD MODUS SHELTER:

- 3 SIDES GLAZED
- ECOBOARD™ SIDE PANELS AT LOW LEVEL

STANDARD MODUS SHELTER WITH FULL BACK PANEL:

- 2 SIDES GLAZED
- 1 ECOBOARD TOP BACK PANEL
- ECOBOARD SIDE PANELS AT LOW LEVEL

Modus Smoking & Vaping Shelter

Modus shelters can be supplied with reduced-height panels, providing a 50% open wall area to comply with UK Smoking Shelter legislation.

Smoking area signage is available as an optional feature.

Modus can also be fitted with Ashmount SG™ cigarette bins on the Ecoboard panels. Please contact our sales office for details.



Optional Extras

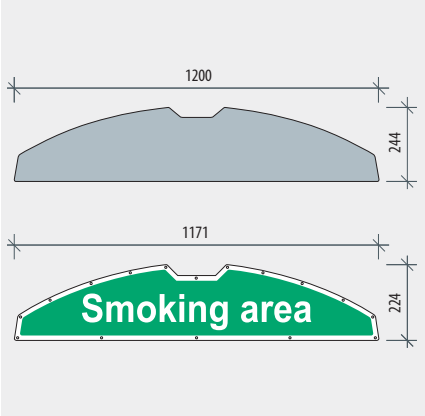

Blank or printed signage.



Side- or rear-mounted perch seating.



Shelter-mounted Ashmount SG™.



Full rear panel.
Ideal for siting against a wall.



Safety station configuration includes a roof, solid rear and right-hand panels, and a left-hand panel with a glazed window.



Transparent roof.

Delivery

- Modus is delivered fully assembled as standard for immediate base fixing. For multiple roll-out programmes or locations with restricted access, flat-pack delivery is available for self-assembly.

Installation

- Modus shelter is supplied ready for immediate surface fixing onto a suitable concrete foundation using the M12 sleeve anchor bolts provided. For installation, four fixing holes per spigot leg should be drilled to 18mm diameter x 130mm minimum depth, positioned at least 100mm from any edge of the foundation.
- When installing on tarmac or block paving, a concrete base is required to provide secure fixing.
- Alternative fixings may be used, provided they offer comparable shear and tensile load capacities to those supplied.

© Glasdon 11/2026